REV	Date	Description
X1	2024/06/19	New issue
X2	2024/06/21	Update cable length
X3	2024/07/03	Update product specifications, parts, and material lists

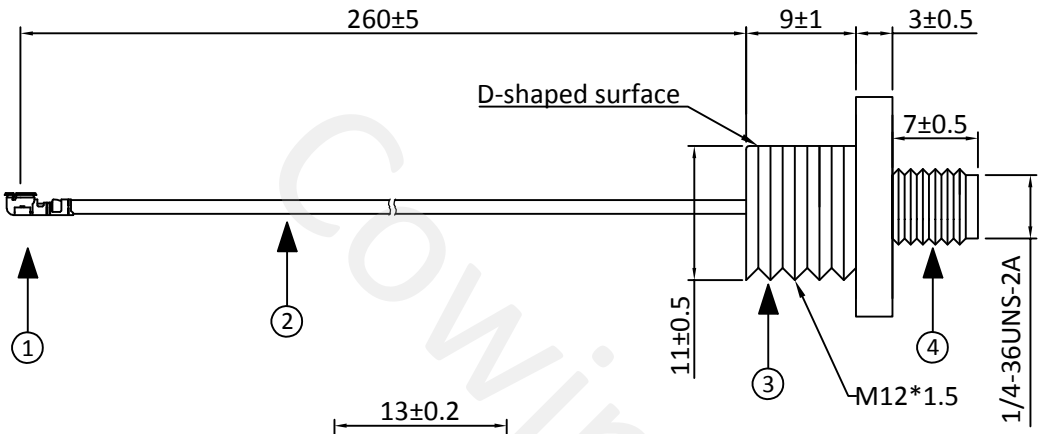

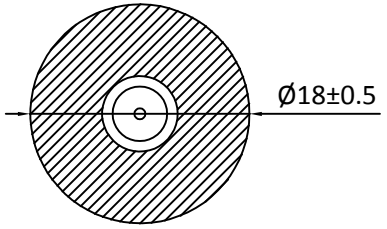

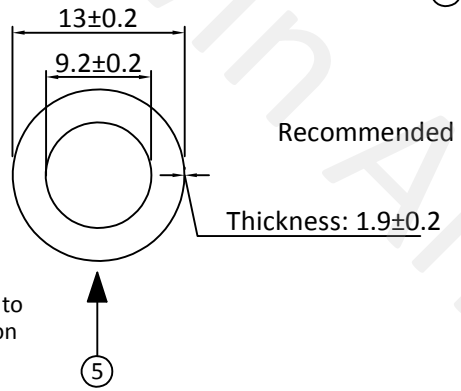

This part needs to be assembled on the product

Recommended installation torque：0.8-1.5N.m

Suggested drilling size

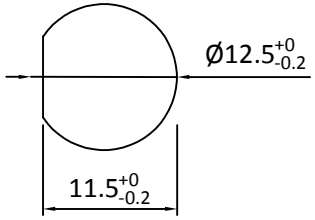

Specification:

- Frequency Range: 0-3G
- Impedance: 50Ω
- V.S.W.R: ⩽1.5
- 100% Continutity,short and open circuit test
- Materials,parts and process must by environmentally (ROHS and REACH)

NO	Name	Description	Q'TY	Remark
5	Waterproof ring	Silica gel	1	Red
4	Connector 2	SMA Female	1	Copper binary alloy-plating
3	Fixed seat	THERMELT 195	1	Black
2	Cable	φ1.13 Low loss cable	1	Black
1	Connector 1	φ1.13 I-PEX I(equivalents)	1	Copper gold-plating

XX.	±5.0	Approved: Terry	Customer	
X.	±3.0		Part NO.	
.X	±1.0	Checked:	Part name	SMA-IPEX Cable
.XX	±0.2		CW P/NO.	CW-LJX-0192
.XXX	±0.1	Drawing: Gezhipeng	REV / Unit / File :	
			X1 / m/m / Sheet : 1/1	

Cowin Antenna

Cowin Antenna